LADDER

All wall mounted ladder type heated towel rails.

Models : Bolshoi, Niko Alto, Bathroom, Bathroom OZ, Cubo B, Niko, Niko OZ, Ensuite, Ensuite OZ, Cubo E Niko S, Niko OZ S, Cubo, Fineline, Fineline S, Streamline, Streamline S.

FEATURES

Voltage options	Mains 230V or 12V*
Easy install	ALL wall types, pre-wiring IS required
Cable	Left or right*
Ecotimer	Ecotimer included

SPECIFICATIONS

Recommeded use	Residential and commercial	**Power entry**	ANY leg, left or right*
Materials	Stainless steel 304 grade	**Voltage**	230V AC 50Hz / 12V AC*
FInish	Mirror polish (chrome appearance) & Satin brushed	**Wattage**	60W - 200W*
Technology	Dry element (no leaks)	**Standards**	AS/NZS:60335.2.43
Element	Replaceable	**Safety rating**	IPX5*
Options	Heated or non heated		

* SEE PRODUCT LABEL FOR PRODUCT SPECIFICATION

DISCLAIMER Products in this specification manual must by regulation be installed by licensed and registered trade people. The manufacturer/distributor reserves the right to vary specifications or delete models from their range without prior notification. Dimensions and set-outs listed are correct at time of publication however the manufacturer/distributor takes no responsibility for printing errors.

Tech Page Version 3.3

ATTENTION : PLEASE LEAVE THIS GUIDE WITH THE CUSTOMER FOR FUTURE REFERENCE

LADDER

INSTALLATION INSTRUCTIONS

SAFETY

This appliance is not intended for use by persons (including children) with reduced physical, sensory or mental capabilities, or lack of experience and knowledge, unless they have been given supervision or instruction concerning use of the appliance by a person responsible for their safety. Children should be supervised to ensure that they do not play with the appliance.

WARNING: In order to avoid a hazard for very young children, this appliance should be installed so that the lowest heated rail is at least 600mm above the floor.

ELECTRICAL (230V)

- Must be installed by a registered electrician.
- Means for disconnection must be incorporated in the fixed wiring in accordance with wiring guidlines AS/NZS 3000:2000.
- Manufactured and tested to AS/NZS 60335.2.43.
- Minimum 50 mm clearance to surrounding surfaces.

ELECTRICAL (12V)

- Minimum 50 mm clearance to surrounding surfaces.
- The 12V 'safety isolating' transformer supplied must be located in a dry accessable location (do not cover with insulation).
- The towel rail may be installed in wet area electrical zones 1, 2 & 3 as specified in AS/NZS 3000:2000.
- Distance from transformer to towel rail must be less than 2 metres (see FAQ's).
- Typical transformer locations include: Ceiling cavity / Wall cavity (behind switch plate) / Cupboard.

1. WALL PREPARATION

- Ladder towel rails may be fixed to ANY type of wall, timber stud, steel stud or masonry (solid or cavity).
- Stud walls (timber or steel) require timber nogs at the correct position for **at least 3** legs.
- If the precise position can't be determined early in the job, consider nogging with 18mm construction ply, covering a larger area.
- Be aware that attempting to fix into plasterboard or cement sheeting alone is NOT recommended. Plasterboard (in particular) will not hold long term.

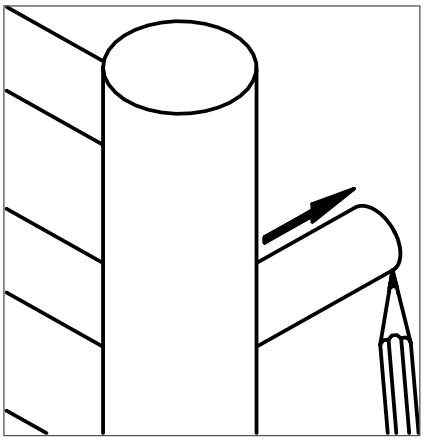

FIGURE 1

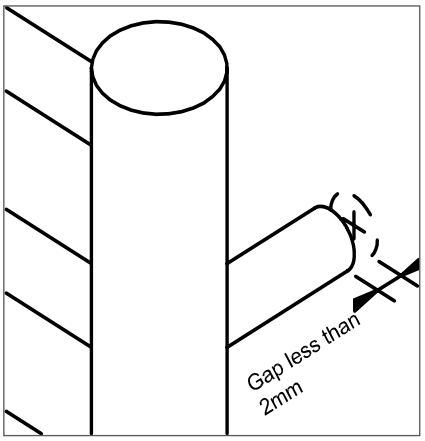

FIGURE 2

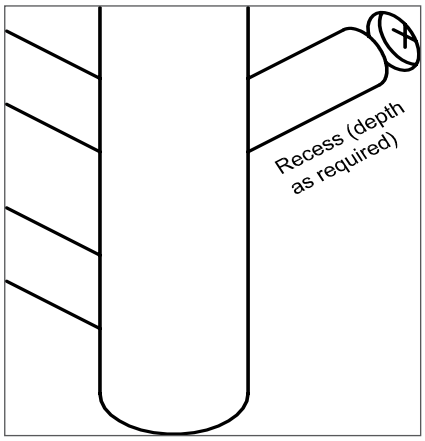

FIGURE 3

ELECTRICIANS please ensure a copy of the installation instructions is left with the end user for future reference.

LADDER

INSTALLATION INSTRUCTIONS

2. INSTALLATION

- Place the towel rail against the wall in the desired position, to line up with wall framing where applicable.
- Using a fine pencil, or by gently pressing the rail against the wall, mark the position for all four rail legs. See Fig 1.0.
- IMPORTANT - Ensure that all four legs touch the wall when the towel rail is in the correct position against the wall.
- A gap of no more than 2mm is ideal. See Fig 2.0.
- If there is excessive gap, one of the legs could be recessed to correct the wall alignment. See Fig 3.0.
- Do not be tempted to flex the towel rail to close a large gap during final assembly as this will damage the towel rail and/or mounting components.
- Screw the mounting inserts securely to the wall in the locations marked. See Fig 4.0.
- A small amount of vaseline applied to each insert at this time will make assembly easier.
- Press the towel rail onto the mounting inserts gradually, checking that each leg is lined up with the inserts. See Fig 5.0.
- Screw the selft tapping screws into the underside of each leg to finally secure the rail. See Fig 6.0.

3. TIMER AND SWITCH

- The towel rail must have a switch in the bathroom that can be identified as the towel rail switch. This is typically a separate switch mechanism on the light switch plate for the bathroom. eg. 3 gang switch plate – lights – extractor – towel rail.
- The supplied 'ECOTIMER' is a 230 – 240V device that should be installed behind the switchplate between the switch and the transformer. See Fig 6.0.

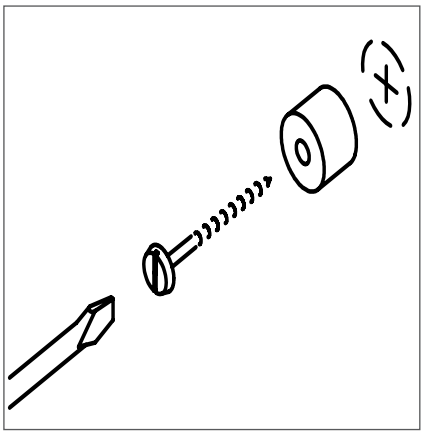

FIGURE 4

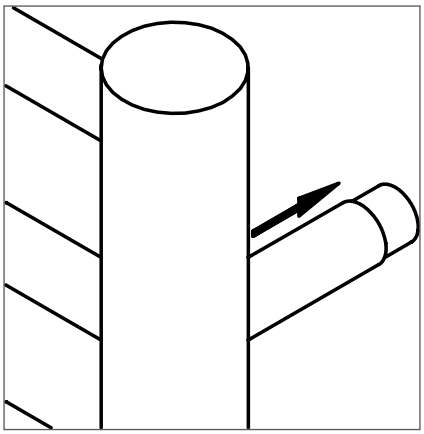

FIGURE 5

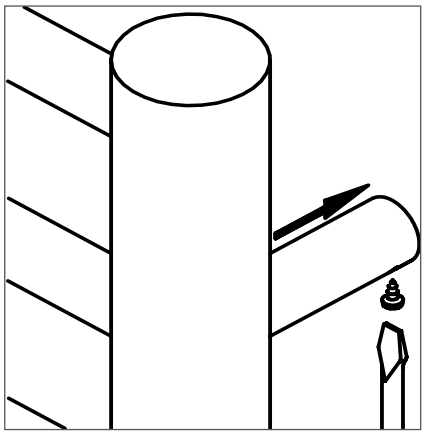

FIGURE 6

ELECTRICIANS please ensure a copy of the installation instructions is left with the end user for future reference.

LADDER

COMPONENT LIST

4 x Round black mounting inserts	4 x Plastic rawl plugs, for installation on masonry walls
4 x Stainless steel grub screws	4 x Zinc plated long screws, pan head 10g x 50mm

TRANSFORMER KIT (12V MODELS ONLY) *TO BE ORDERED SEPARATELY

1 x Ecotimer	2 x 3m lengths 1mm 2 appliance wire 90 deg C
1 x Electronic transformer	

CLEANING RECOMMENDATIONS

This bathroom product should not be cleaned with abrasive materials eg. steel wool/scourers. Do not use any corrosive or abrasive cleaning agents containing acids or scouring agents. Bleaches can also discolour products and therefore should not be used.

Use a soft cloth moistened with warm soapy water or a silicone based household wax/polish such as SC Johnson 'Pledge' for general polishing and cleaning of the appliance. Fine scratching can be removed using the correct metal polish. Recommended brands are 'Autosol' and 'Brasso Paste', both available in tubes from supermarkets and car care outlets. Damage caused by any improper treatment is not covered by by the product warranty – refer to Warranty Conditions on the last page.

ELECTRICIANS please ensure a copy of the installation instructions is left with the end user for future reference.

LADDER

FAQ'S

Q. Can I place the towel rail more than 2 metres from the transformer? (12V MODELS ONLY)

A. The main reason for the limit is NOT voltage drop, as this may be overcome with larger wire. Modern electronic transformers operate at very high frequencies and extending the length of low voltage wiring will cause unacceptable levels of radio frequency interference (buzzing on AM radios). This may not just affect your own home, but potentiallly neighbours as well, and should be taken seriously. Old technology 'iron core' transformers do not have this problem and may be used to extend longer than 2 metres, provided that larger cable is used to counteract voltage drop. Electricians may contact DC Short Ltd for further technical advice if needed.

Q. Is my towel rail operating at the correct temperature?

A. Towel rails will not feel as hot on cold winter days as they do on hot summer days as they are not thermostatically controlled. The towel rail contains no moving parts or electrical contacts, this ensures a long life. A quick test to determine if the rail is functioning correctly follows:

1. Turn the towel rail on and leave for one hour with no towels.
2. After one hour each bar of the towel rail should be a similar temperature, but no more than warm.
3. Cover each bar of the towel rail with a DRY FOLDED towel, three towels (a double layer of towelling on each bar). Leave the towel rail on for another hour.
4. After one hour check that the temperature underneath the towelling on each bar is HOT to the touch. The exposed surfaces should remain warm only.

Q. I have tested the transformer with a multimeter prior to installation and detect no voltage? (12V MODELS ONLY)

A. Electronic transformers operate at high frequencies, above the sampling frequency of a standard multimeter. It is unlikely that a multimeter will detect any voltage. It should also be noted that electronic transformers will not start without a load connected.

If you need to test that the transformer is functioning correctly, EITHER connect the transformer to the towel rail to see if it gets warm, OR temporarily connect a 50W halogen lamp to the transformer to see if it lights up.

LADDER

7 YEAR WARRANTY – DOMESTIC USE

This warranty covers faults in the product construction, material and assembly. Products which are within 7 years from the date of purchase, found upon inspection by DCS, to be defective in construction, material or assembly, will be repaired or exchanged with an equivalent product free of charge. Replaced items become DCS property. All replacement products will be available for collection without charge to the customer at the nearest DCS retailer to the customer's location, or elsewhere as agreed between the customer and DCS.

LABOUR AND SPARE PARTS

The labour for the replacement of products and spare parts to which this warranty applies will be supplied by DCS or relevant supplier using licensed tradesmen engaged by DCS or relevant supplier within 1 year from the date of purchase. Spare parts which are within 1 year from the date of purchase found upon inspection by DCS to be defective in construction, material or assembly, will be replaced free of charge.

MANUFACTURER'S PROVISIONS

The following spare parts are covered by a 3 year warranty:

- Heating Elements.
- Transformer.
- Timer.

WARRANTY CONDITIONS

This warranty will apply only under all of the following conditions:

- The item has been installed by a qualified tradesman.
- The item has been installed for and subjected to domestic residential use only.
- Failure is due to a fault in the manufacture of the product.
- Proof of purchase (including the date of purchase) is provided.
- The installation of the product is in accordance with the instructions provided.

This warranty does not cover products purchased as an ex-display without being fully checked and tested for sale by the manufacturer.
This warranty does not include faults caused by:

- Unsuitable or improper use.
- Incorrect installation or installation not in accordance with the instructions provided.
- Installation or part installation by the purchaser or any person other than a qualified tradesman.
- Normal wear and tear.
- Inadequate or complete lack of maintenance.
- Chemical, electrochemical or electrical influences.
- Harsh detergents or abrasive cleaners used on product finishes.

1 YEAR WARRANTY – COMMERCIAL USE

'Commercial' use is all use other than for normal domestic residential purposes, including use in non-business places as in public buildings, schools, sports centres and in establishments that contain private bathrooms with high frequency of use by many individuals, such as hotels, motels, retirement villages and hospitals.

The Commercial warranty covers this product against manufacturing faults in the construction, material and assembly of both the finished products and any spare parts for a period of 1 year from the date of purchase. Products and spare parts which are found upon inspection by DCS to be defective in construction, material or assembly will be repaired or exchanged free of charge.

Replaced items become DCS property. The labour for the replacement of products and spare parts to which this warranty applies will be supplied by DCS or relevant supplier using licensed tradesmen engaged by DCS or relevant supplier. The Warranty Conditions and exclusions which apply to the noncommercial warranty also apply to this commercial warranty.

EXCLUSIONS

To the fullest extent permitted by law, DCS excludes all liability for damage or injury to any person, damage to any property, and any indirect consequential or other loss or damage.

CLAIM PROCEDURE

For all warranty queries customers are to contact the branch where the product was purchased. These details can be found on your purchase invoice. Our goods come with guarantees that cannot be excluded under the New Zealand or Australian Consumer Law.

You are entitled to a replacement or refund for a major failure and for compensation for any other reasonably foreseeable loss or damage. You are also entitled to have the goods repaired or replaced if the goods fail to be of acceptable quality and the failure does not amount to a major failure.

DOMESTIC 7 YEAR QUALITY GUARANTEE

COMMERCIAL 1 YEAR QUALITY GUARANTEE